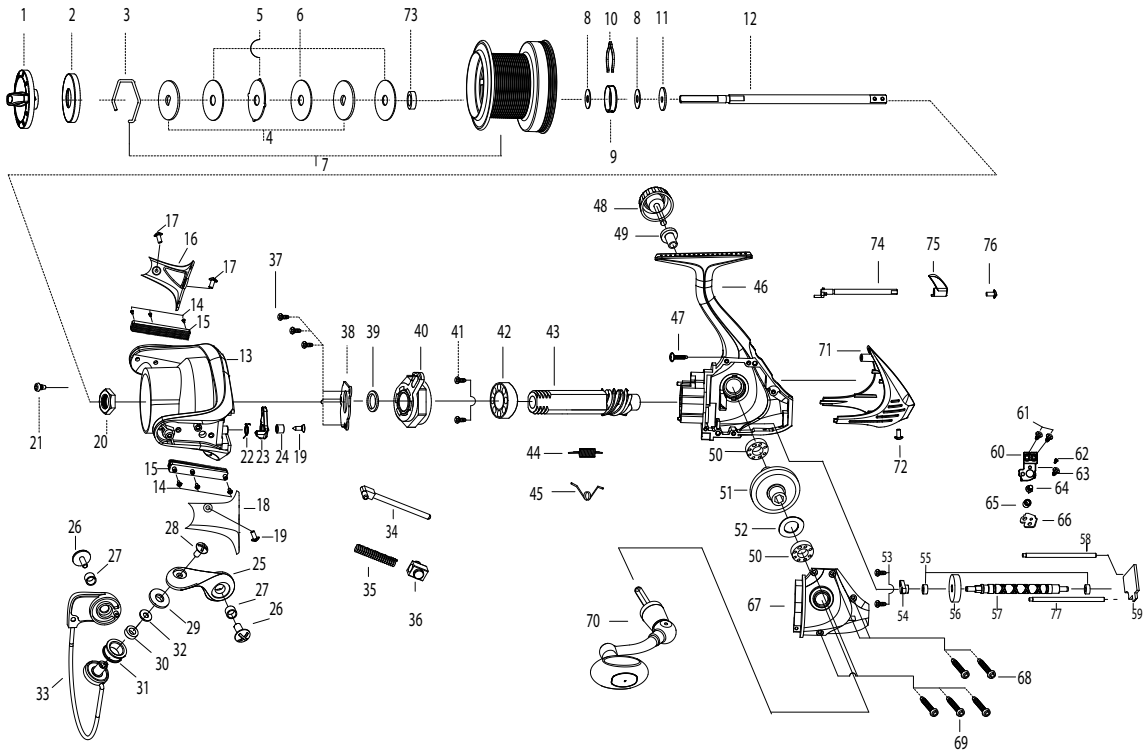

MITCHELL®

Model 1580059

MX SURF 7000 00

ITEM	DESCRIPTION	MX SURF 7000	ITEM	DESCRIPTION	MX SURF 7000	ITEM	DESCRIPTION	MX SURF 7000
1	DRAG KNOB ASSEMBLY	1591155	27	BUSHING	1122117	53	SCREW	1122130
2	WATERPROOF RING	1562707	28	SCREW	1085322	54	RETAINER BLOCK	1122131
3	RETAINER RING	1111425	29	WASHER	1125966	55	BALL BEARING	1131801
4	KEY WASHER	1111426	30	BALL BEARING	1112125	56	OSCILLATION GEAR	1122133
5	EARED WASHER	1111427	31	KINE ROLLER	1125969	57	WORM SHAFT	1122134
6	WASHER	1111428	32	BUSHING	1125967	58	GUIDE BARI	1558326
7	SPOOL ASSY	1591156	33	BAIL ASSY	1591159	59	RETAINER BLOCK	1122136
8	WASHER	1122023	34	BAIL LEVER	1122119	60	SLIDER	1122137
9	CLICK HOUSE	1122024	35	SPRING	1122120	61	SCREW	1085341
10	DRAG RETAINER	1122025	36	HOLDER	1122121	62	SCREW	1122138
11	WASHER	1122026	37	SCREW	1092844	63	SCREW	1122139
12	MAIN SHAFT	1122027	38	BALL BEARING RETAINER	1122122	64	LINE GUIDE PAWL	1122140
13	ROTOR	1591157	39	WASHER	1111480	65	BUSHING	1122141
14	SCREW	1122099	40	ONG WAY CLUTCH BEARING	1111483	66	SLIDER PLATE	1122142
15	BRUSH	1143885	41	SCREW	1122123	67	BODY COVER	1591162
16	BAIL HOLDER COVER	1557749	42	BALL BEARING	1111486	68	SCREW	1122144
17	SCREW	1122110	43	PINION GEAR	1122124	69	SCREW	1111513
18	BAIL ARM COVER	1557750	44	SPRING	1108940	70	HANDLE ASSY	1591163
19	SCREW	1111479	45	SPRING	1122125	71	REAR COVER	1557756
20	ROTOR NUT	1111457	46	BODY	1591160	72	SCREW	1122148
21	SCREW	1085900	47	SCREW	1122127	73	BALL BEARING	1112125
22	LEVER SPPING	1122112	48	HANDLE SCREW CAP	1591161	74	ANTA-REVERSE LEVER	1122149
23	BAIL LEVER	1122113	49	WASHEW	1111494	75	ANTA-REVERSE BUTTON	1591164
24	BUSHING	1122114	50	BALL BEARING	1111486	76	SCREW	1122151
25	BAIL ARM	1591158	51	DRIVE GEAR	1122129	77	GUIDE BAR II	1558327
26	SCREW	1122116	52	BUSHING	1111500			